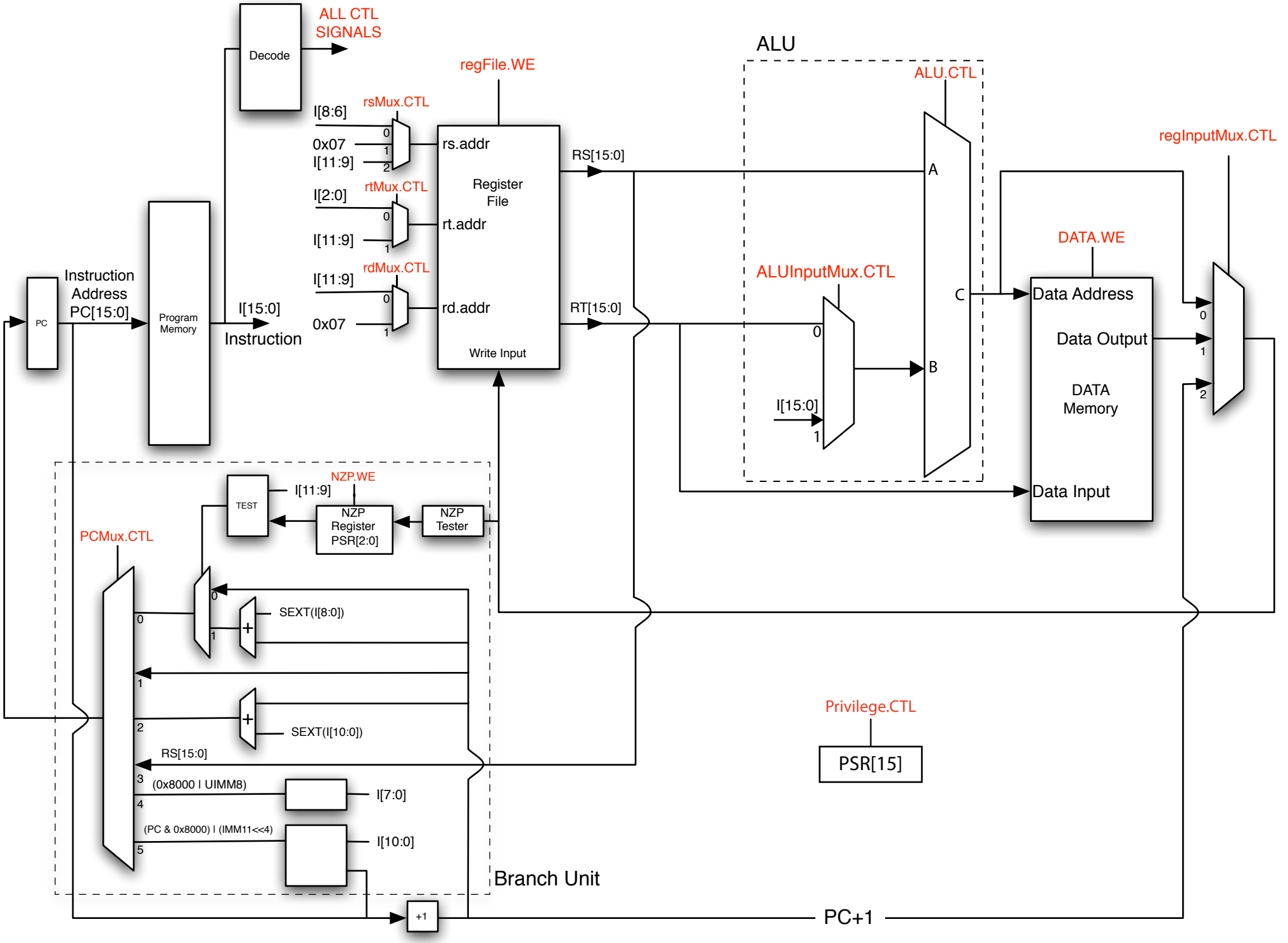Single Cycle Implementation of the LC4 ISA